DR. VISHWANATH KARAD MIT WORLD PEACE UNIVERSITY

School of Engineering & Technology

Department of Electrical & Electronics Engineering

Academic Year: 2025–26

CIRCUIT CONCLAVE HACKATHON 2026

BILL OF MATERIALS (BOM)

4×4 Register File with Read/Write/Clear

Harshvardhan Rathod (PRN: ————) & Alok Deep Verma (PRN: ————) | FY B.Tech E&CE | Div: 23 | 2025–26

Source: RAM-project-001.csv — KiCad BOM export. All ICs are standard 74-series TTL in DIP packages from Texas Instruments, sourced from the project custom library (RAM-project-001-library-footprint).

FULL COMPONENT LIST

KiCad Ref	Part / Value	Specification	Qty	Purpose	Cost
A7408	SN74LS08N	Quad AND Gate, DIP-14	1	Write-enable clock gating	
B074244	SN74LS244N	Octal 3-State Buffer, DIP-20	1	Tri-state read bus (Bus 0)	
B174244	SN74LS244N	Octal 3-State Buffer, DIP-20	1	Tri-state read bus (Bus 1)	
CC1	Capacitor	Ceramic Disc, 0.1 µF 50V	1	VCC decoupling	
CC2	Capacitor	Ceramic Disc, 0.1 µF 50V	1	VCC decoupling	
CNE555	NE555P	555 Timer, DIP-8	1	0.5 Hz astable clock	
CR1	Resistor	10 kΩ ¼W Axial	1	555 R1 — charge path	
CR2	Resistor	68 kΩ ¼W Axial	1	555 R2 — timing	
D74139	SN74LS139AN	Dual 2-to-4 Decoder, DIP-16	1	2-bit address decoding	
D074175	SN74LS175N	Quad D Flip-Flop, DIP-16	1	4-bit register — Row 0	
D174175	SN74LS175N	Quad D Flip-Flop, DIP-16	1	4-bit register — Row 1	
D274175	SN74LS175N	Quad D Flip-Flop, DIP-16	1	4-bit register — Row 2	
D374175	SN74LS175N	Quad D Flip-Flop, DIP-16	1	4-bit register — Row 3	
DIS0–DIS3	SW_100SP1T1B4M2QE	E-Switch SPST	4	Data input D0–D3	
AS0, AS1	SW_100SP1T1B4M2QE	E-Switch SPST	2	Address input A0–A1	
N7402	SN7402N	Quad NOR Gate, DIP-14	1	Row-select clock gating	
O7432	SN7432N	Quad OR Gate, DIP-14	1	Asynchronous clear logic	
OL0–OL3	CQY99	LED 5mm T-1 3/4, LED_D5.0mm	4	Output bus bit indicators	
OR0–OR3	Resistor	220 Ω ¼W Axial	4	LED current limiting	
SWC1	SW_100SP1T1B4M2QE	E-Switch momentary	1	Clear button (→ LOW)	
SWW1	SW_100SP1T1B4M2QE	E-Switch momentary	1	Write/RW button (→ HIGH)	

COMPONENT SUMMARY

Category	Qty	KiCad Reference(s)	Cost
ICs (7 unique types)	11	A7408, B074244, B174244, CNE555, D74139, D074175–D374175, N7402, O7432	
Switches (E-Switch)	8	DIS0–DIS3, AS0, AS1, SWC1, SWW1	
LEDs	4	OL0–OL3	
Resistors	6	OR0–OR3, CR1, CR2	
Capacitors	2	CC1, CC2	
TOTAL	31	—	

Total: 31 components | Single +5V supply | PCB: KiCad RAM-project-001

PCB LAYOUT — KiCad RAM-project-001

The PCB layout below shows the placement of all 31 components across the memory, allocator, and clock sections.

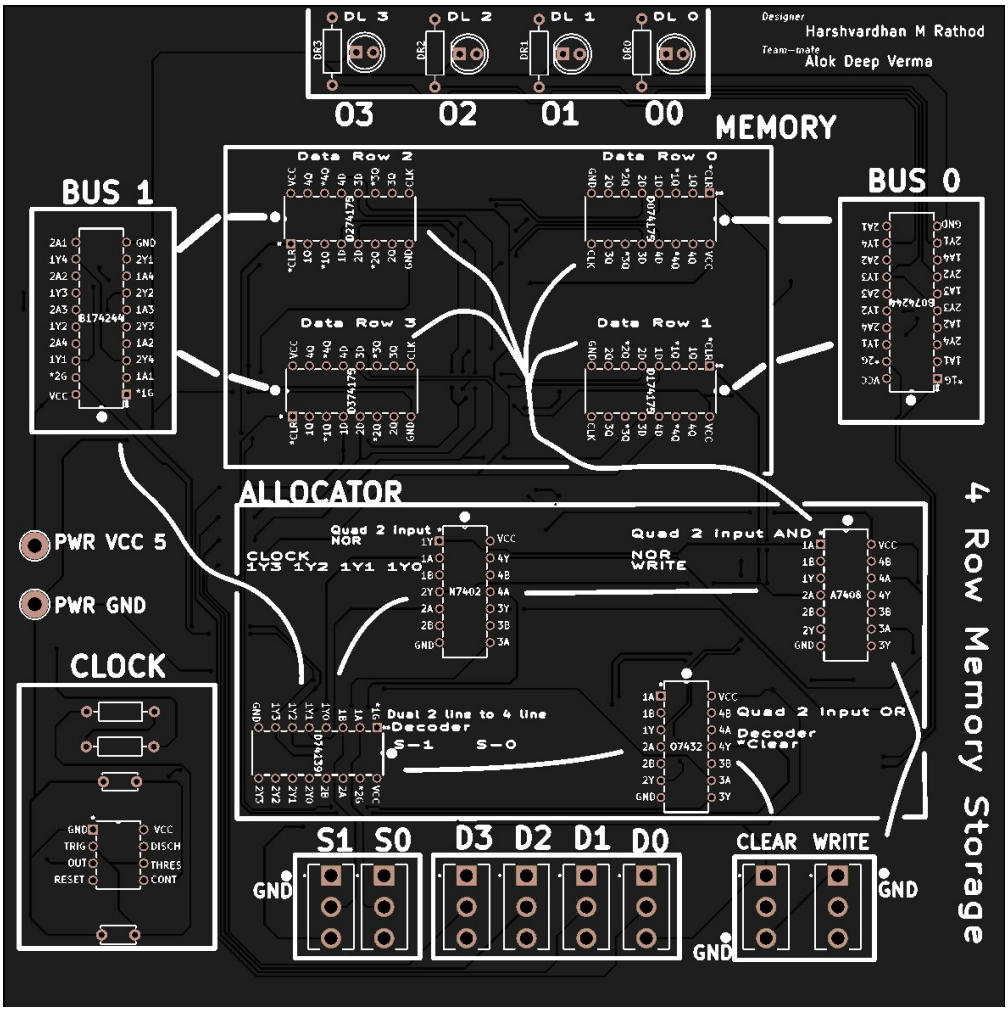

Figure 1: 4 Row Memory Storage — KiCad PCB (RAM-project-001). Designer: Harshvardhan M Rathod | Teammate: Alok Deep Verma

COMPONENT NOTES

1. Integrated Circuits

All ICs are standard 74-series TTL in DIP packages from Texas Instruments. The SN74LS175N (×4) forms the 4-bit register array. The SN74LS139AN decodes the 2-bit address. The SN74LS244N (×2) provides tri-state bus buffering. NOR (SN7402N) and AND (SN74LS08N) gates form the clock-gating logic. OR gates (SN7432N) implement the asynchronous clear network.

2. Switches

All switches use the E-Switch SW_100SP1T1B4M2QE footprint. Data and address inputs use SPST variants (one per bit); Clear and Write use momentary variants. No separate clock button is placed — clock is generated automatically by the NE555P astable circuit at 0.5 Hz.

3. LEDs & Passives

Four CQY99 LEDs (OL0–OL3) with 220 Ω current-limiting resistors display the output bus. The NE555P timing network uses CR1=10 kΩ (R1), CR2=68 kΩ (R2), and a 20 µF electrolytic timing capacitor (add as polarised capacitor CP if not already in schematic). CC1, CC2 are 0.1 µF ceramic disc VCC decoupling capacitors.

4. Cost Column

The Cost column has been left blank as component prices are subject to change. Please refer to current pricing from authorised distributors (e.g., DigiKey, Mouser, Element14) or local suppliers at the time of procurement.

Submission Date: _____ **Verified by (Faculty Mentor):** **_____**	**Faculty Mentor Signature:** **_____** **Team prismlabs Signature:** **_____**